GEMC Tutorial

GEMC

This Tutorial and Support Files Can be Found at gemc.jlab.org

Please send any inaccuracies, improvements or features requests to ungaro@jlab.org

Lesson 4:
Geometry I/O (part I)

In this lesson:

Geometry:

- Basics of geometry I/O
- Create one Volume and run gemc with it
- Detector Inspector

Pre-requisites:

geo1.tar, available at gemc.jlab.org
or at /home/gemc/geo1.tar

Database I/O

First, we need a name for your new geometry. Untar geo1.tar inside a directory of your choice (`tar –xvf geo1.tar`)

Open go_table. This is the script that put the geometry into the mysql database.

Change "mygeo" at the top to something unique. Your name for example:

```
set tables = (mestayer)
```

This will be the mysql table name in user_geometry database on the jlab server

Database I/O

Open my_geometry.pl. This is the geometry script.
Change "mygeo" at the top to the same name you used in go_table.

```
my $envelope = 'mestayer';
my $file     = ' mestayer.txt';
```

When the API will improve, these constraints will disappear and the user will only have to change the geometry script.

Database I/O

Keep my_geometry.pl open. Let's take a look inside

```
$detector{"name"}        = "mygeo";
$detector{"mother"}      = "root";
$detector{"description"} = "my geometry";
$detector{"pos"}         = "0*cm 0.0*cm 0*m";
$detector{"rotation"}    = "0*deg 0*deg 0*deg";
$detector{"color"}       = "ff0000";

$detector{"type"}        = "Box";

$detector{"dimensions"}  = "50*cm 10*cm 10*cm";
$detector{"material"}    = "Air";
```

Same name as Geant4 Manual (Solids Chapter)

Same Parameters as Geant4 Manual (including the order)

Geant4 Solids Manual

To create a **box** one can use the constructor:

```
G4Box(const G4String& pName,
            G4double  pX,
            G4double  pY,
            G4double  pZ)
```

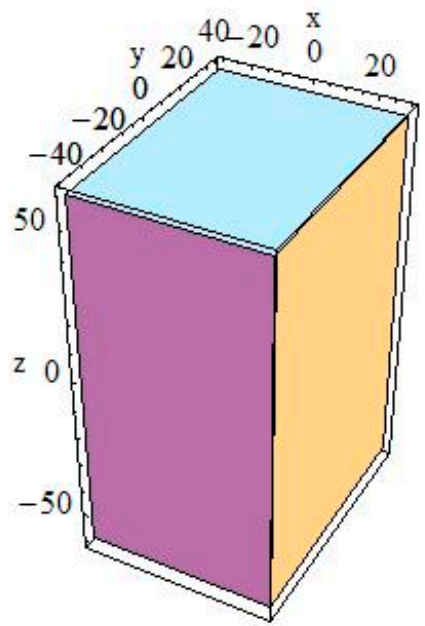

[Rotate the Picture]

In the picture:

`pX = 30, pY = 40, pZ = 60`

by giving the box a name and its half-lengths along the X, Y and Z axis:

pX	half length in X	pY	half length in Y	pZ	half length in Z

Database I/O

We're now ready to play with the geometry.

```
$detector{"name"}        = "mygeo";
$detector{"mother"}      = "root";
$detector{"description"} = "my geometry";
$detector{"pos"}         = "0*cm 0.0*cm 0*m";
$detector{"rotation"}    = "0*deg 0*deg 0*deg";
$detector{"color"}       = "ff0000";
$detector{"type"}        = "Box";

$detector{"dimensions"}  = "50*cm 10*cm 10*cm";
$detector{"material"}    = "Air";
```

- ✓ Change detector name to your choice.
- ✓ Leave Mother to "root"
- ✓ Change position, dimension as you wish
- ✓ Colors: 2 digits hex numbers for each Red Green and Blue. (FFoooo is "red").

When you are done, run:

```
go_table   user_geometry
```

This will load your table to the database

Database I/O

We're now ready to play with the geometry.

```
$detector{"name"}        = "mygeo";
$detector{"mother"}      = "root";
$detector{"description"} = "my geometry";
$detector{"pos"}         = "0*cm 0.0*cm 0*m";
$detector{"rotation"}    = "0*deg 0*deg 0*deg";
$detector{"color"}       = "ff0000";
$detector{"type"}        = "Box";

$detector{"dimensions"}  = "50*cm 10*cm 10*cm";
$detector{"material"}    = "Air";
```

- ✓ Change detector name to your choice.
- ✓ Leave Mother to "root"
- ✓ Change position, dimension as you wish
- ✓ Colors: 2 digits hex numbers for each Red Green and Blue. (FFoooo is "red").

When you are done, run:

```
go_table   user_geometry
```

This will load your table to the database

Table Uploaded

Now run:

```
gemc -GT=mygeo -DATABASE=user_geometry
```

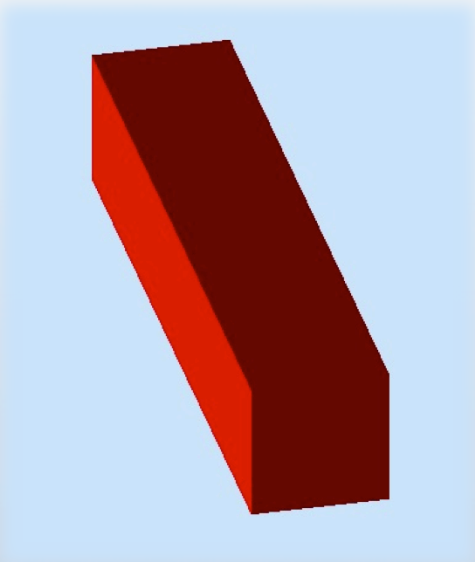

✓ When you run go_table, your geometry loaded on the JLAB mysql server.

✓ This means it's immediately available to anyone, from anywhere.

Detector Inspector

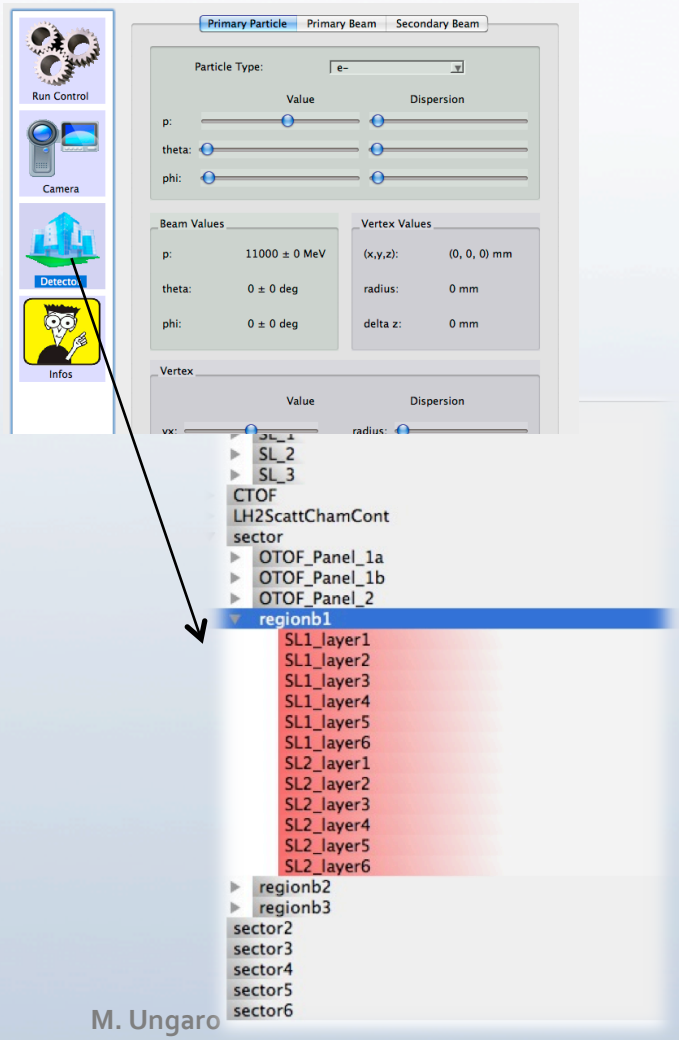

Right Click can:

Switch element visibility
Switch daughters visibility
Switch Wireframe/Solid representation
Change Volume Color
Display Volume Properties ("edit detector")

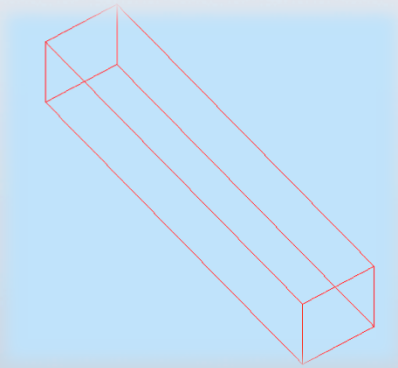

End of Lesson 4:

Geometry I/O (part I)