DWG. NO.	SHT.	REV.
66810-D-03200	1	-

REVISIONS

ZONE	REV.	DESCRIPTION	DATE	APPROVED

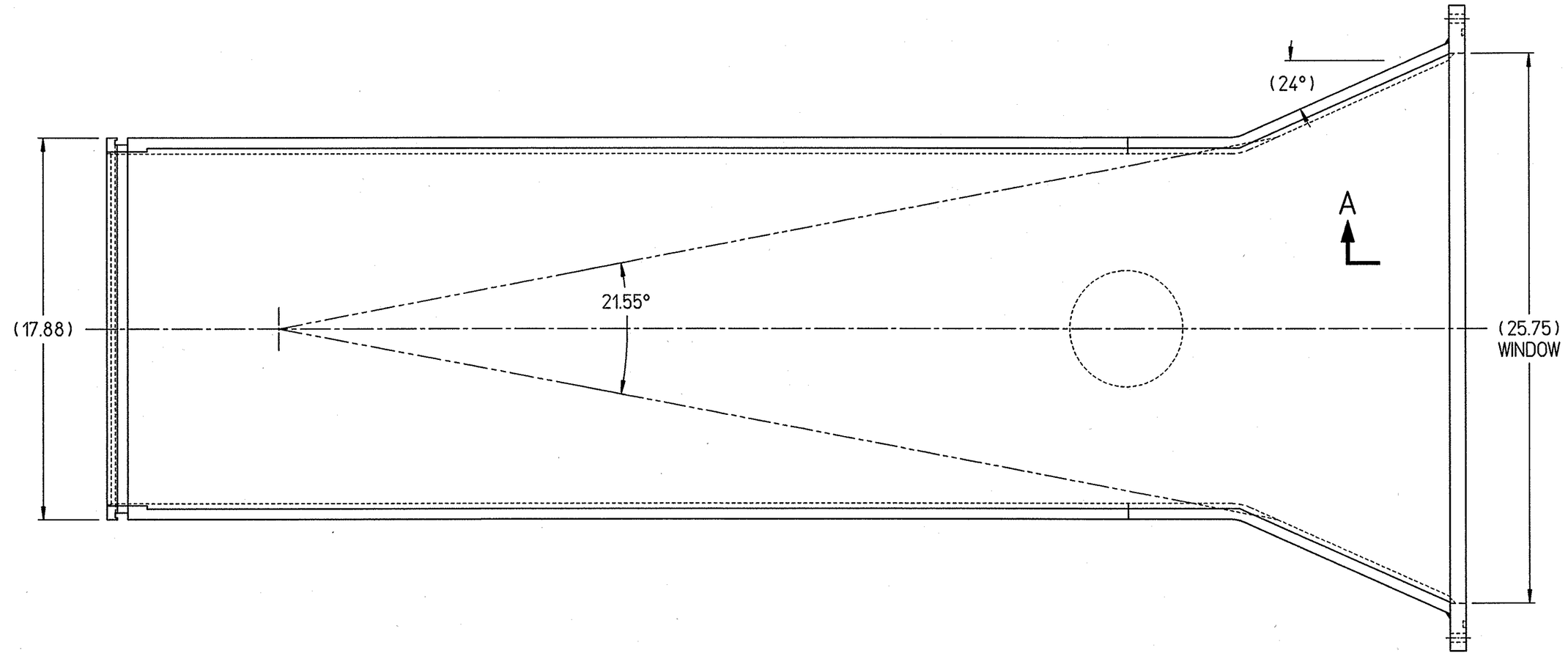

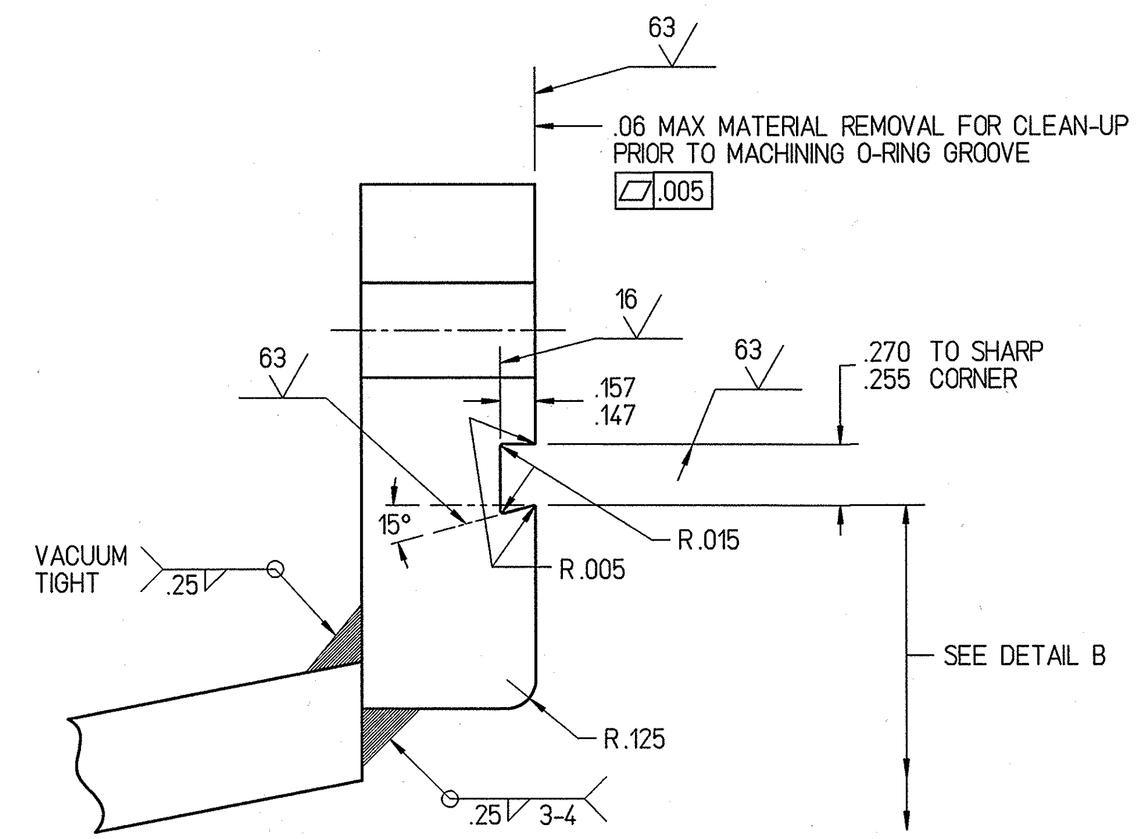

SECTION A-A

SCALE: 2/1

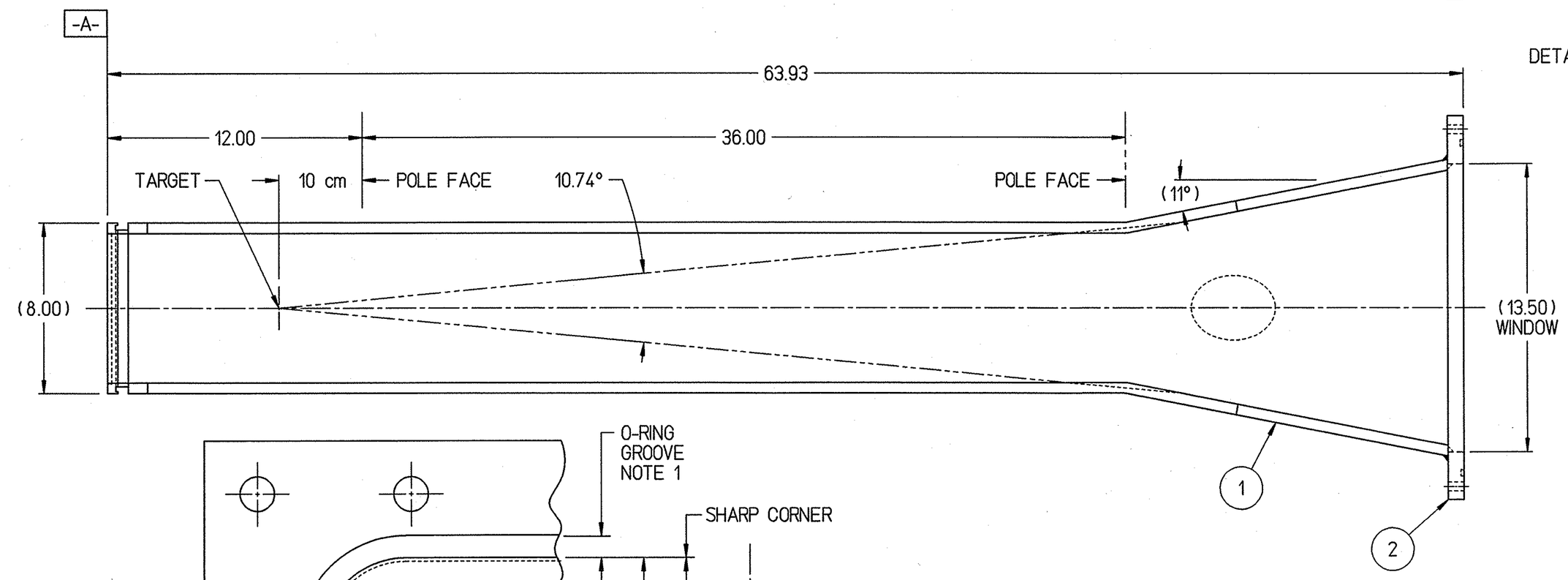

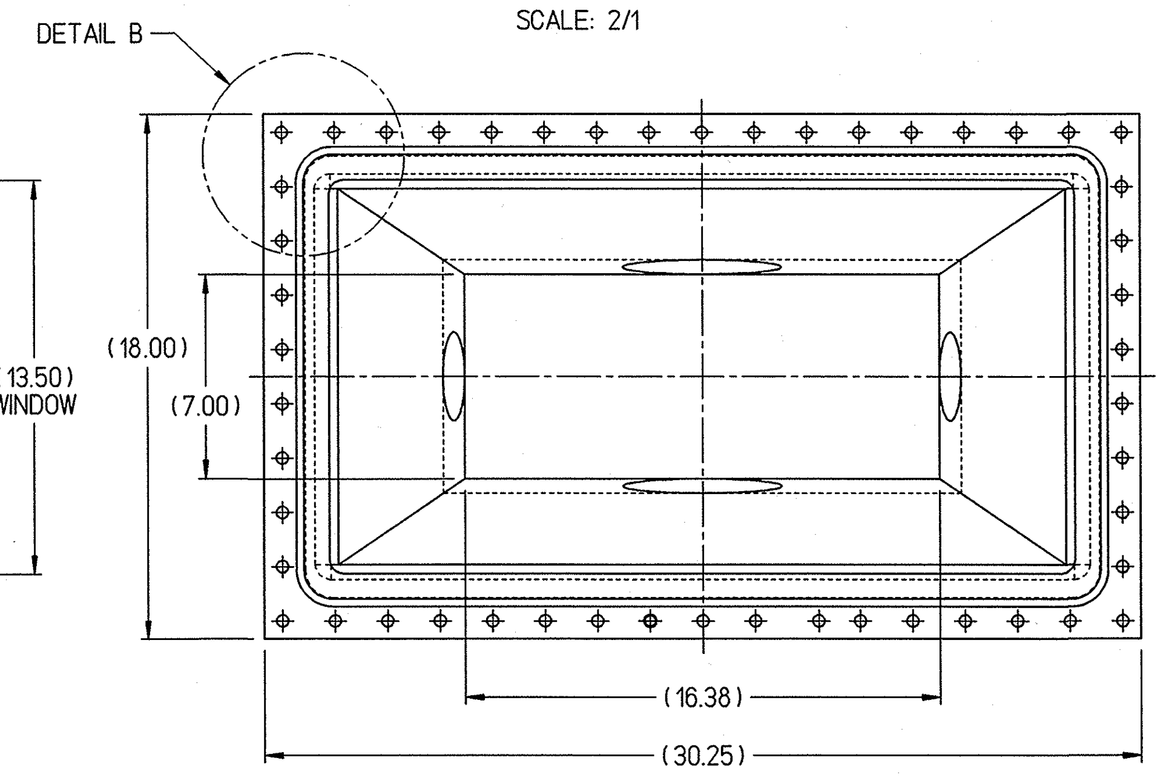

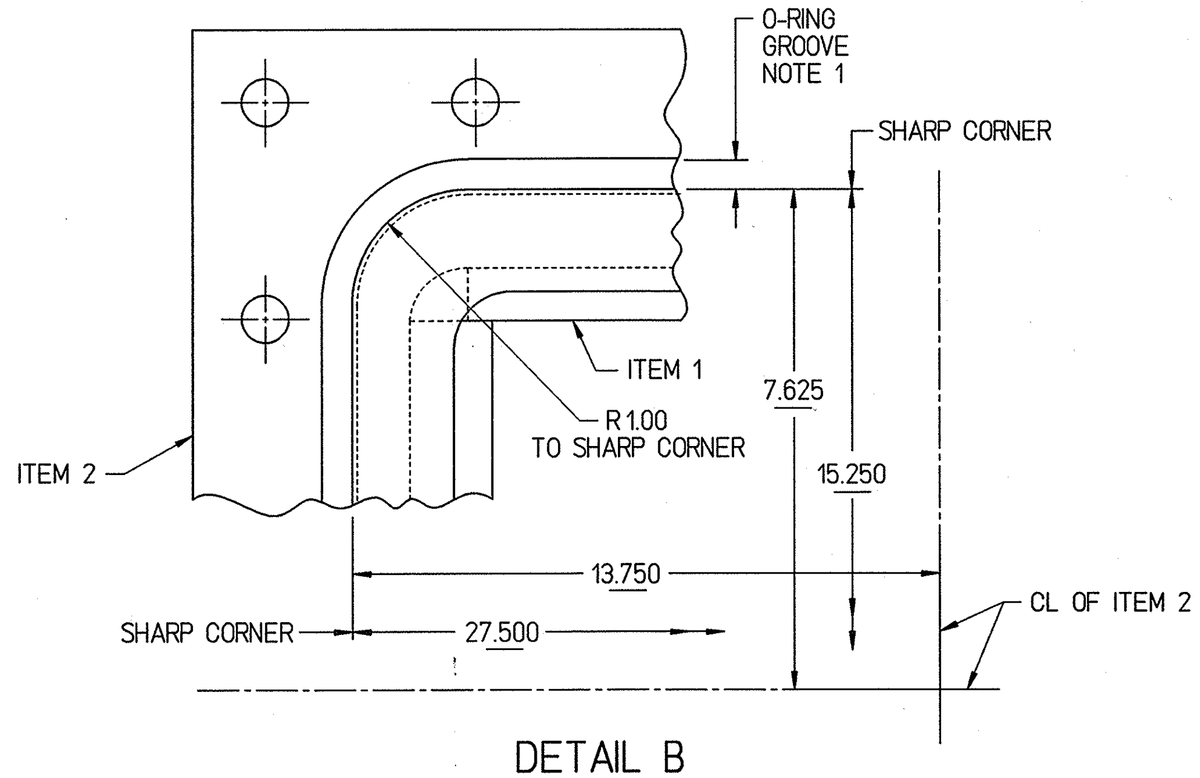

DETAIL B

SCALE 1/1

NOTES:

1. O-RING GROOVE DESIGNED IN ACCORDANCE WITH NEW MEXICO CHAPTER OF THE AMERICAN VACUUM SOCIETY VACUUM APPARATUS DESIGN PRACTICES FOR PARKER 2-395 O-RING UNDER EXTERNAL PRESSURE.
2. WEIGHT= 590 LBS APPROX

QTY. REQD.	ITEM NO.	PART OR IDENTIFYING NO.	NOMENCLATURE OR DESCRIPTION	MATERIAL SPECIFICATION	NOTES
1	2	66810-D-03204	WINDOW FLANGE		
1	1	66810-E-03201	VACUUM BOX WELDMENT		

-01 ASSY — PARTS LIST

DIM & TOL PER ASME Y14.5. UNLESS OTHERWISE SPECIFIED DIMENSIONS ARE IN INCHES
TOLERANCES ARE:
FRACTIONS ± XXX — DECIMAL .XX ± .02, .XXX ± .005 — ANGLES ±

MATERIAL: SEE PARTS LIST

FINISH: UNLESS OTHERWISE NOTED — DEBURR & BREAK ALL SHARP EDGES

DO NOT SCALE DRAWING

CADD I.D. NO. '/wbs/6/hemler/66000/3200/66810d03200'

APPROVALS	DATE
DRAWN P. R. HEMLER	9-7-00
CHECKED	10/10/00
APPROVED	10/10/00
APPROVED	

Jefferson Lab
Thomas Jefferson National Accelerator Facility
NEWPORT NEWS, VIRGINIA
UNITED STATES DEPARTMENT OF ENERGY

HALL B
PAIR SPECTROMETER DIPOLE MAGNET
VACUUM BOX

SIZE D — DWG. NO. 66810-D-03200 — REV. -

SCALE 1/4 — USED ON ASSY NO. 66810-E-03209 — SHEET 1 OF 1