HPS Test Beamline

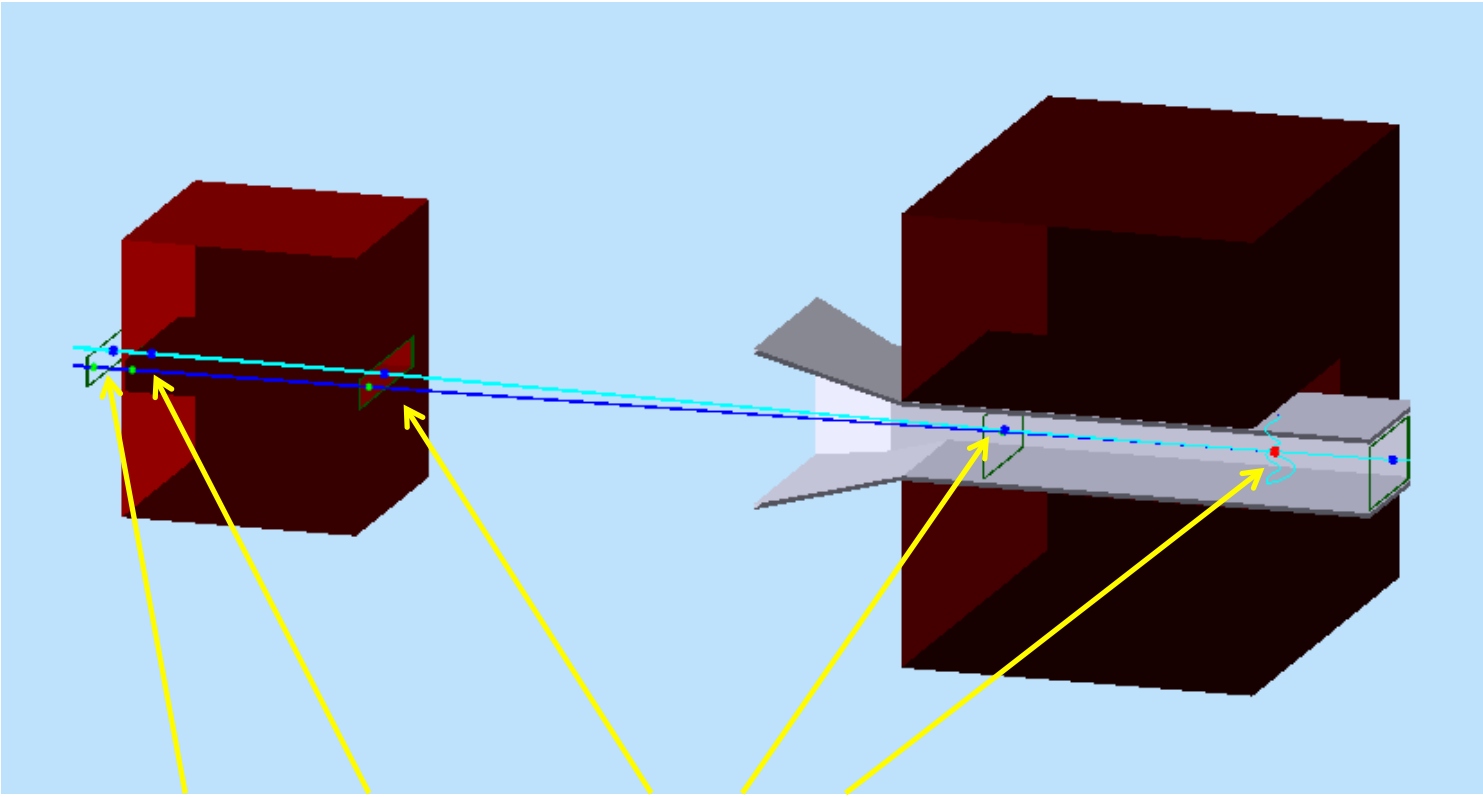

Flux Detectors to get the x,y distribution at various z locations

HPS Test Beamline

Last Silicon Layer Beam Profile

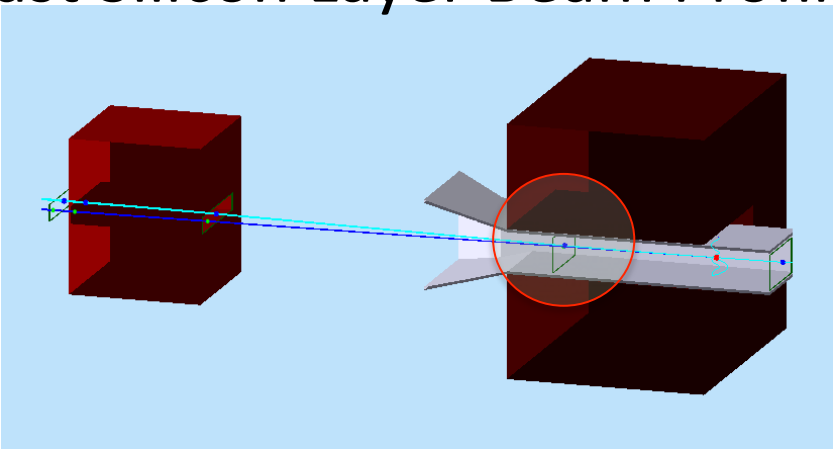

40K 2.2GeV e- on 0.125% W target

Electrons x: μ=71.93 mm σ=0.15
Gammas x: μ=88.37 mm σ=0.20

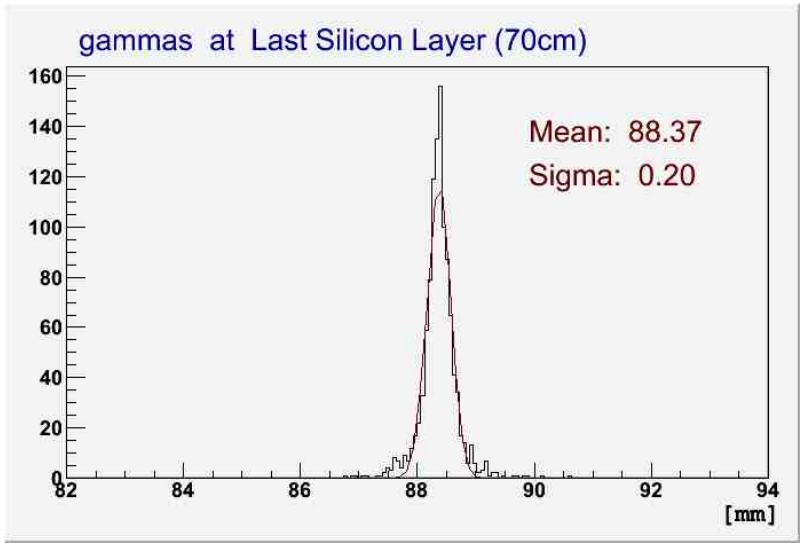

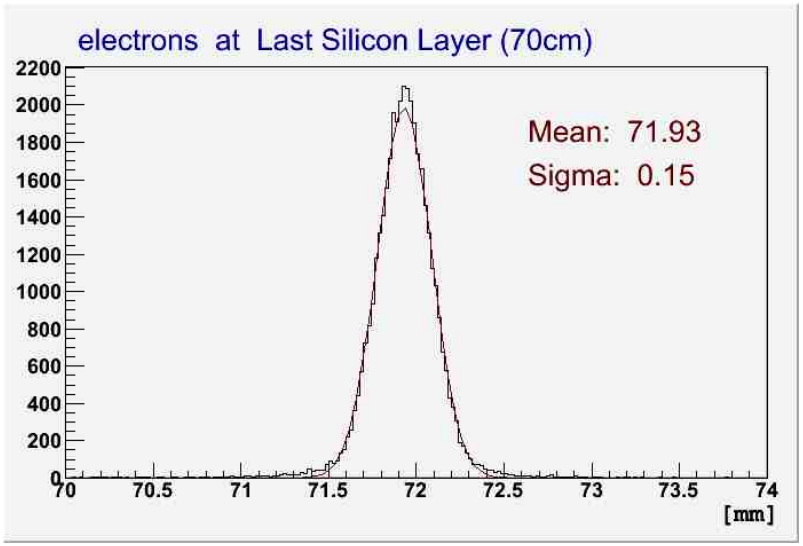

HPS Test Beamline

Entrance of 2nd ID Beam Profile

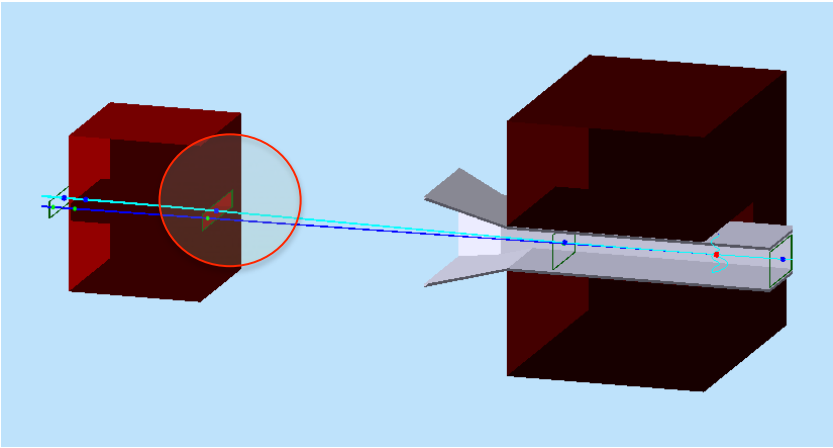

40K 2.2GeV e- on 0.125% W target

Electrons x: μ=11.85 mm σ=0.52
Gammas x: μ=138.4 mm σ=0.63

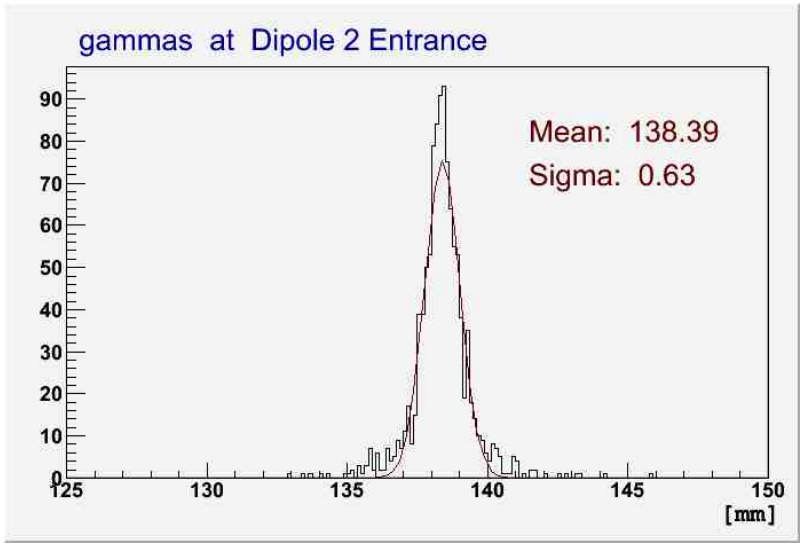

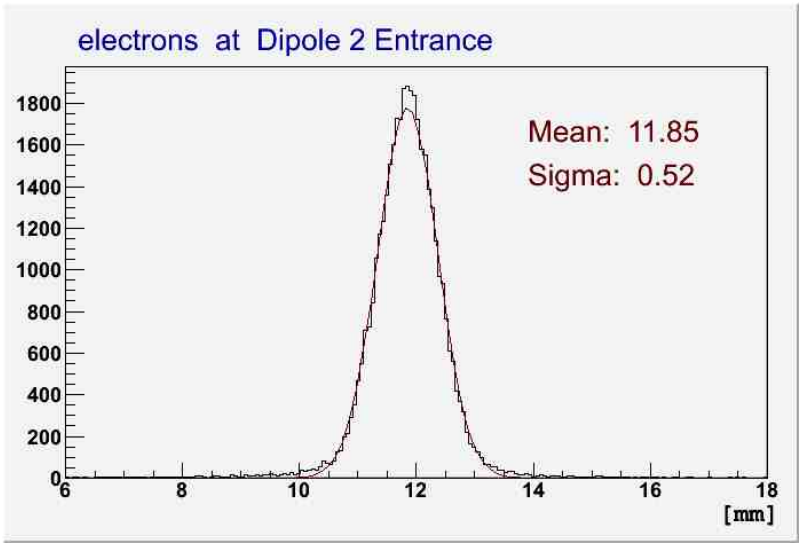

HPS Test Beamline

Entrance of 2nd ID Beam Profile

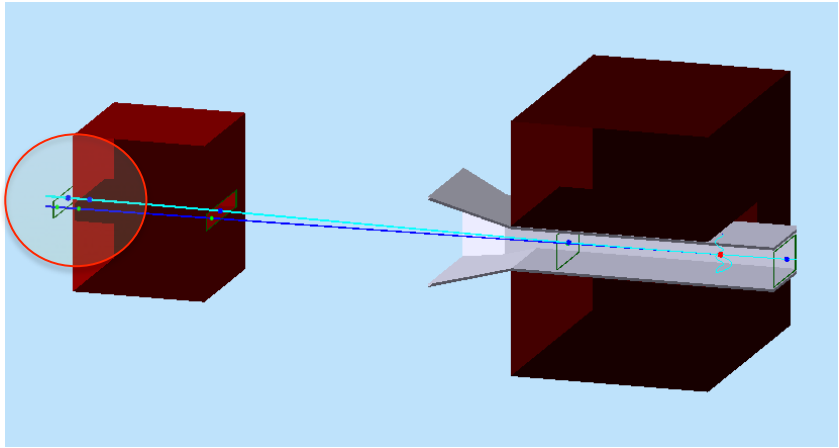

40K 2.2GeV e- on 0.125% W target

Electrons x: μ= -0.16 mm σ=0.65
Gammas x: μ=157.0 mm σ=0.78

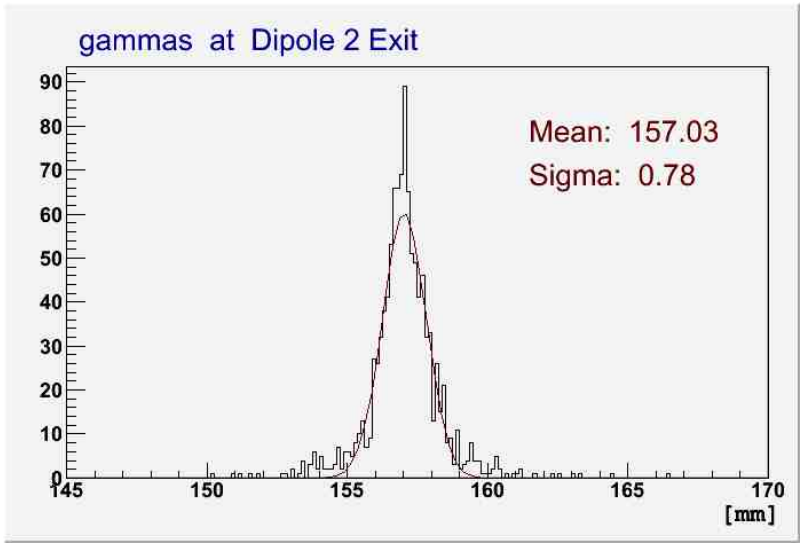

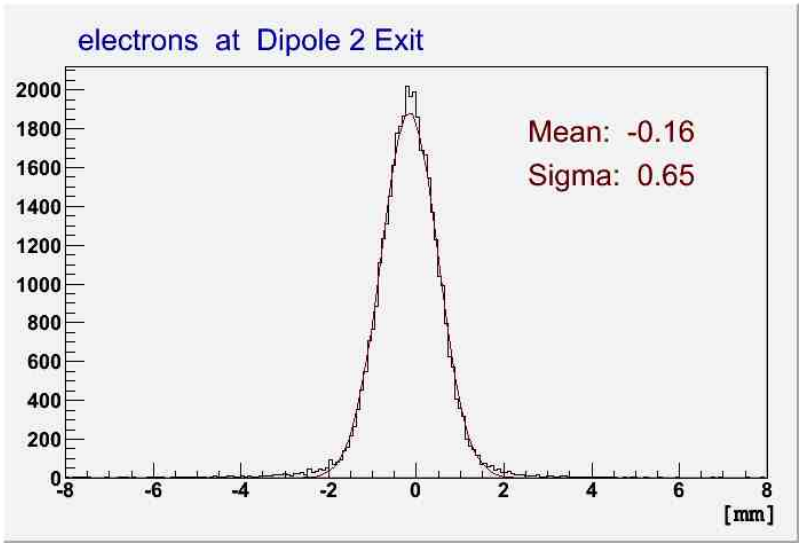

HPS Test Beamline

Vacuum Flange at Exit of 2nd Dipole

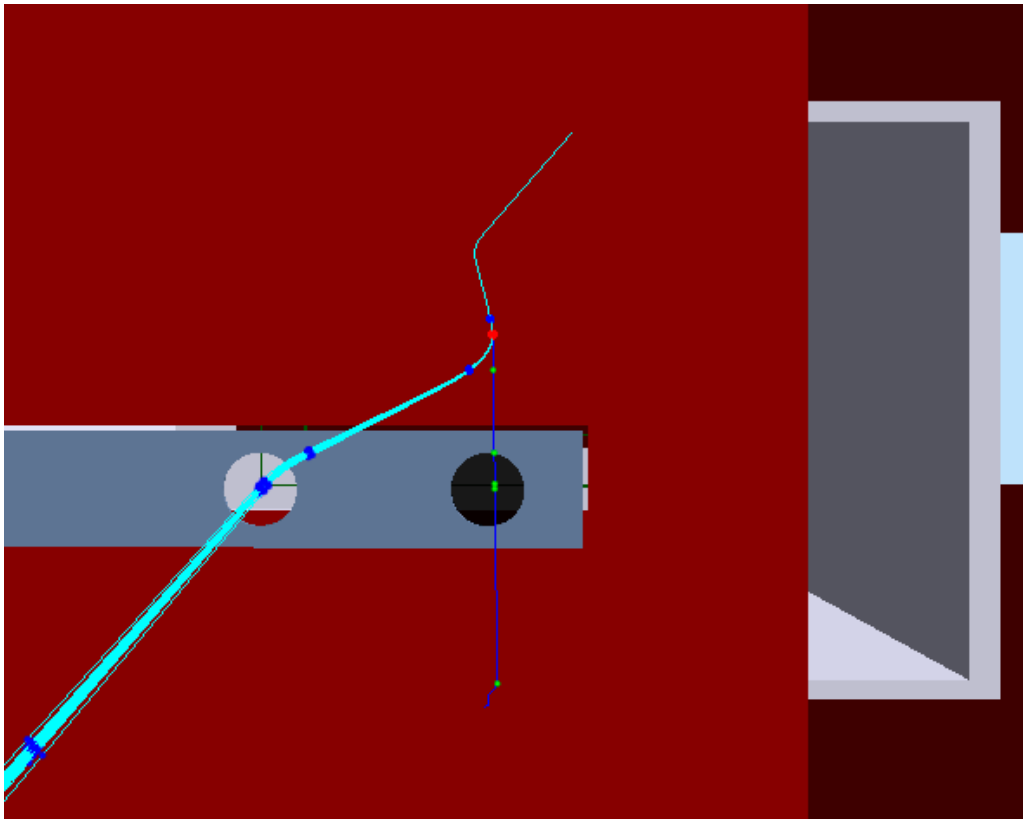

Kapton Window 100 μm

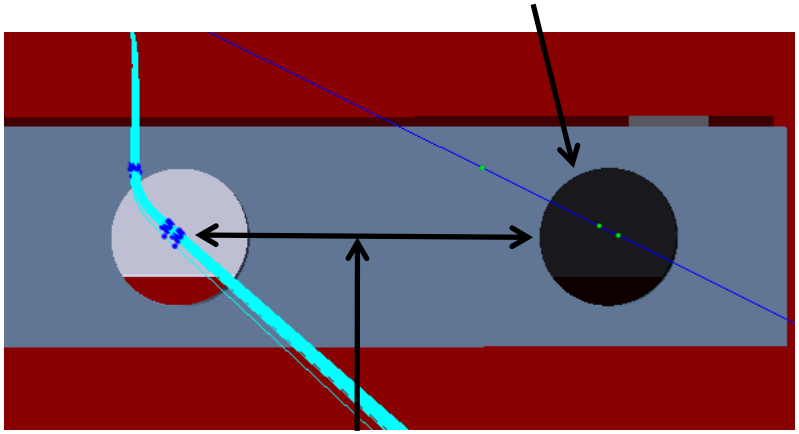

Holes Separation: 157.0 mm
ID: 2''

2 cm Stainless Steel.
Heigth: 3.1''

HPS Test Beamline

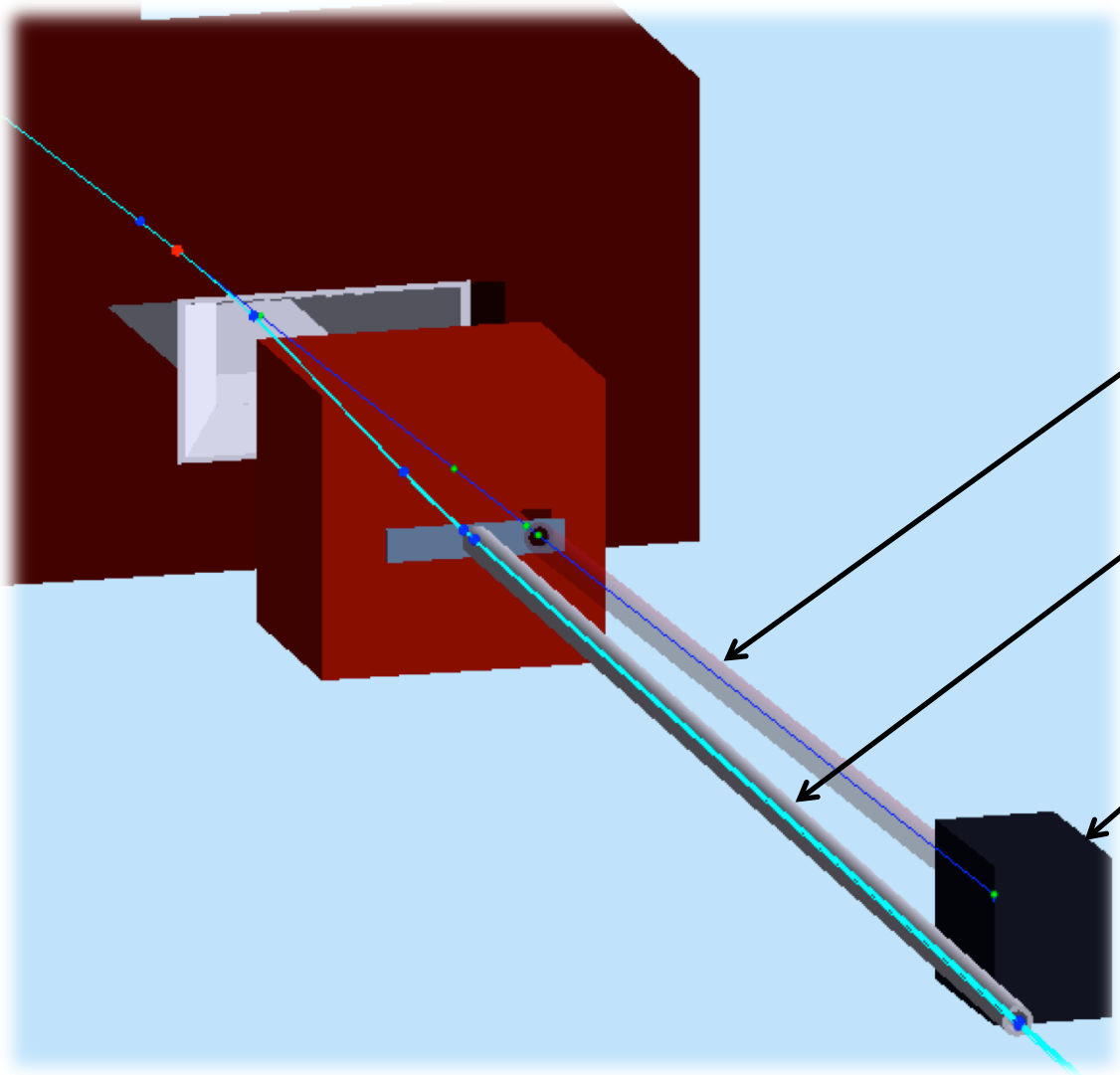

150’’ Helium Bag
D=2’’

200’’ Steel Pipe
ID = 2’’
OD = 3’’

Photon Absorber:
30cmx40cmx50xcm W

HPS Test Beamline

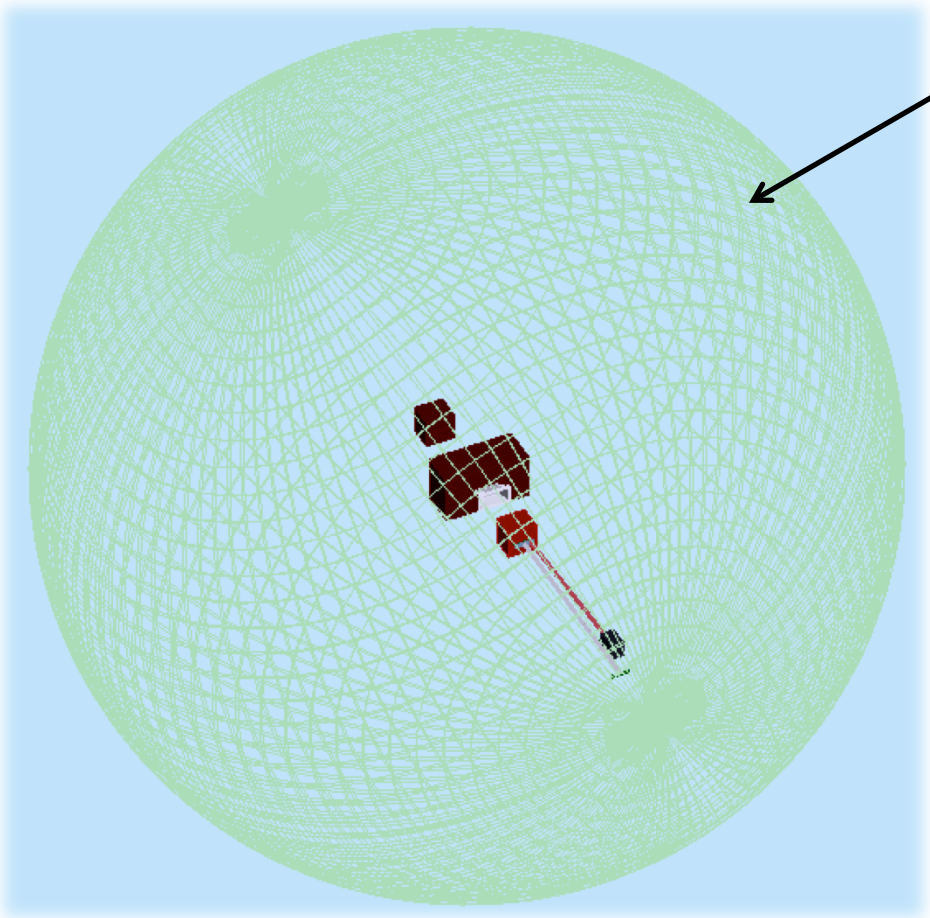

Flux of e-, photons, neutrons on the sphere

1. With and without photon absorber

2. Optimize flanges and pipes positions and thicknesses

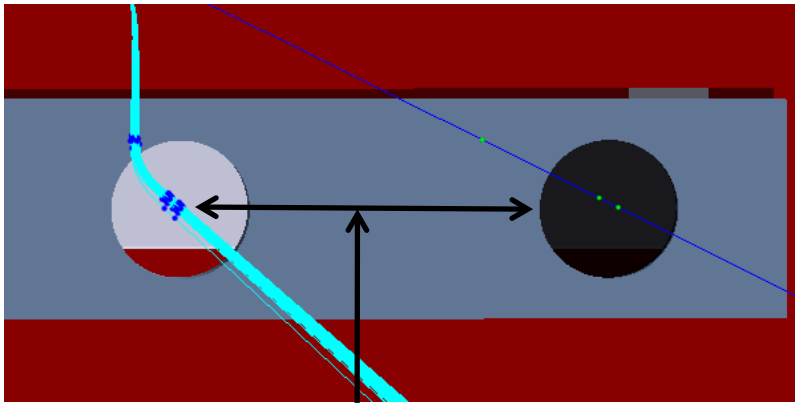

HPS Test Beamline

Time on Target: 3525.08 nanoseconds.

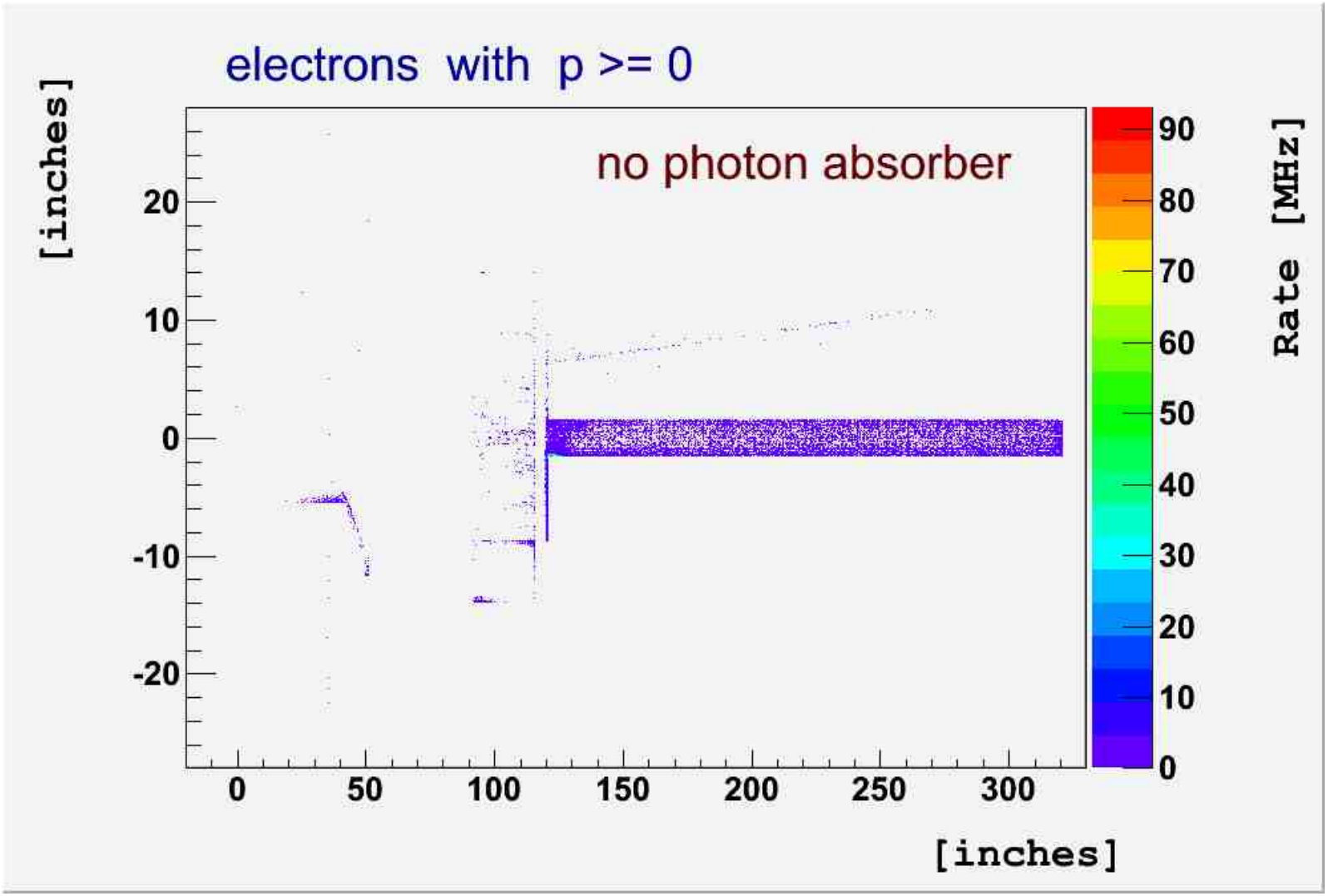

HPS Test Beamline

Time on Target: 3525.08 nanoseconds.

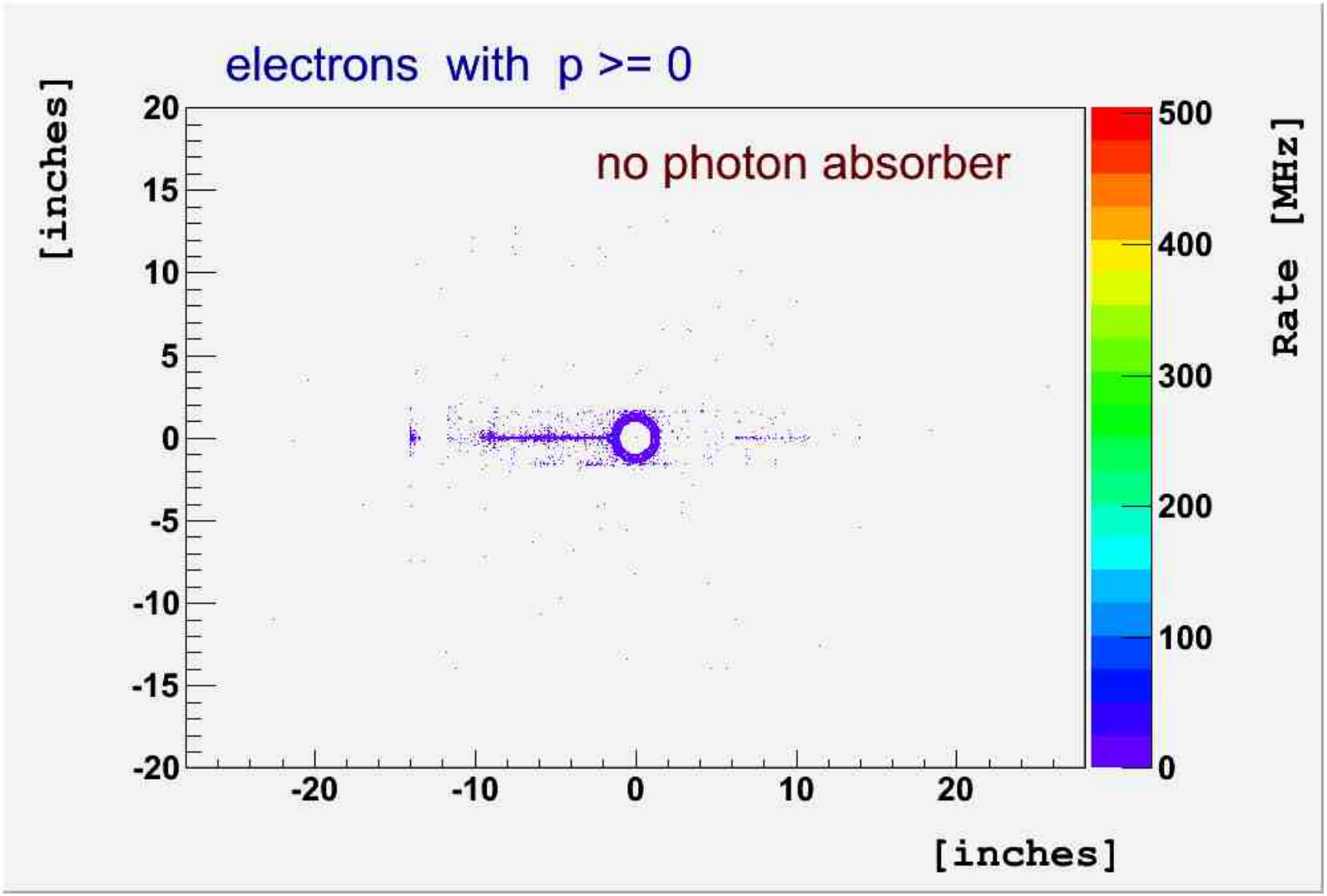

HPS Test Beamline

Time on Target: 3525.08 nanoseconds.

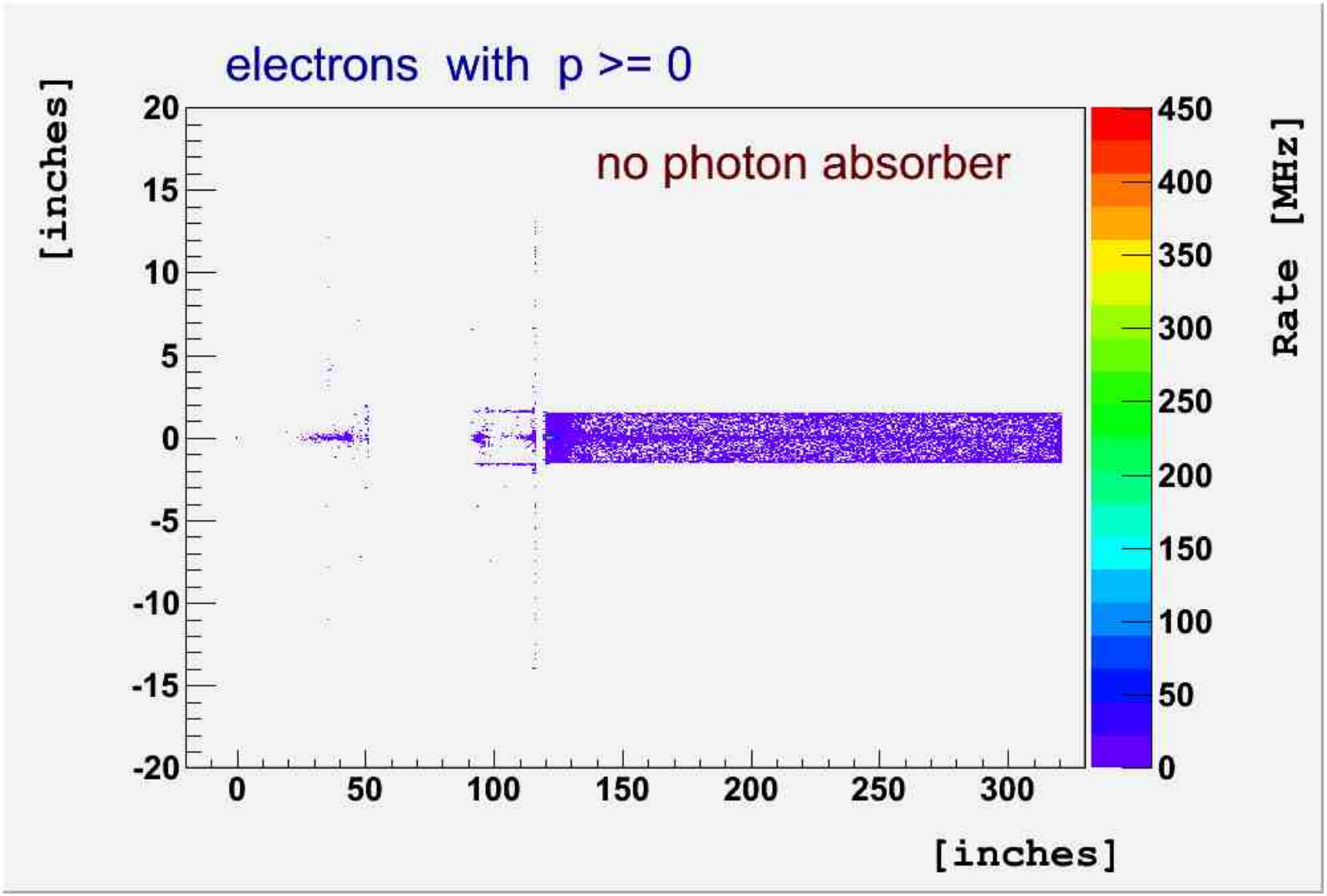

HPS Test Beamline

Time on Target: 3525.08 nanoseconds.

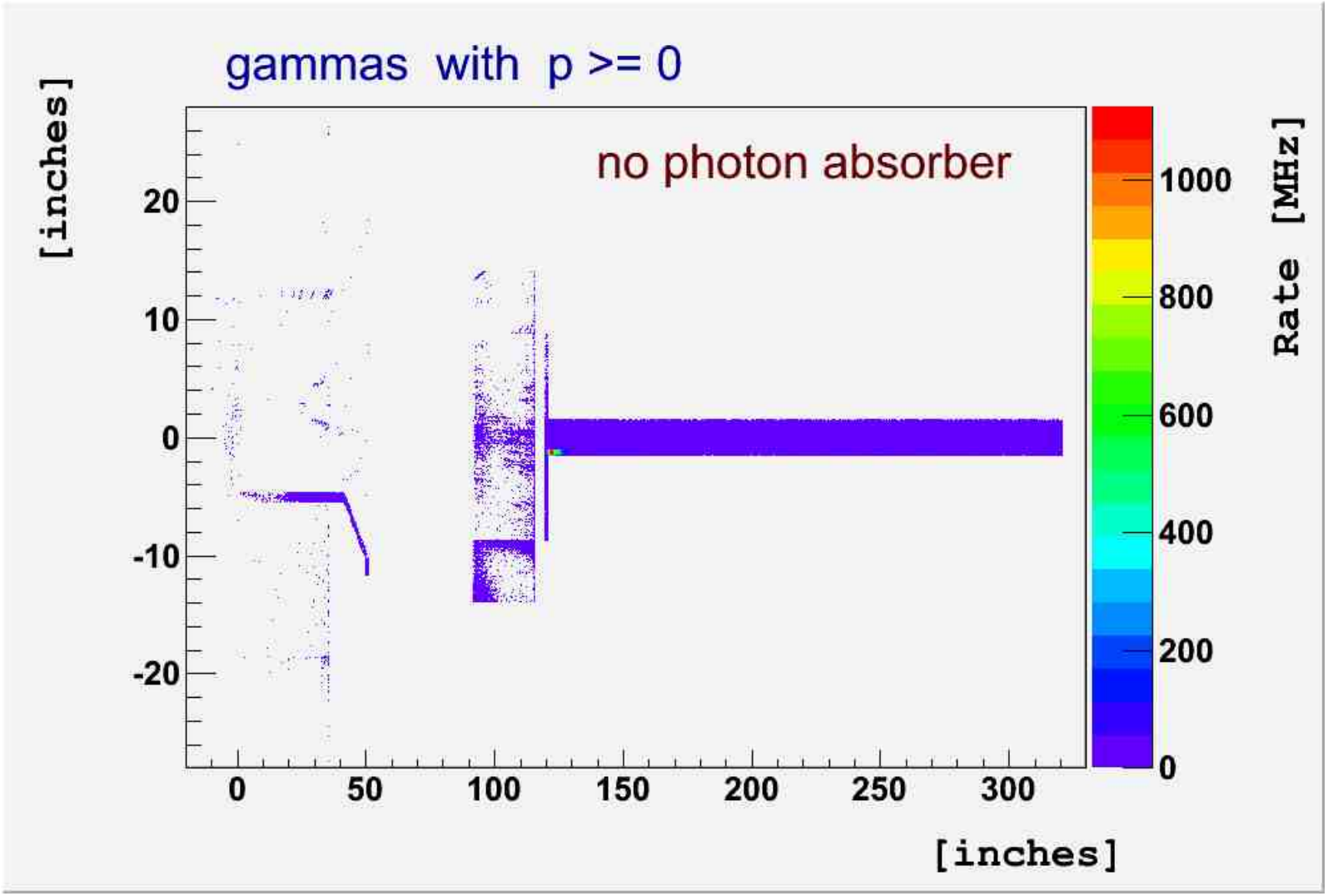

HPS Test Beamline

Time on Target: 3525.08 nanoseconds.

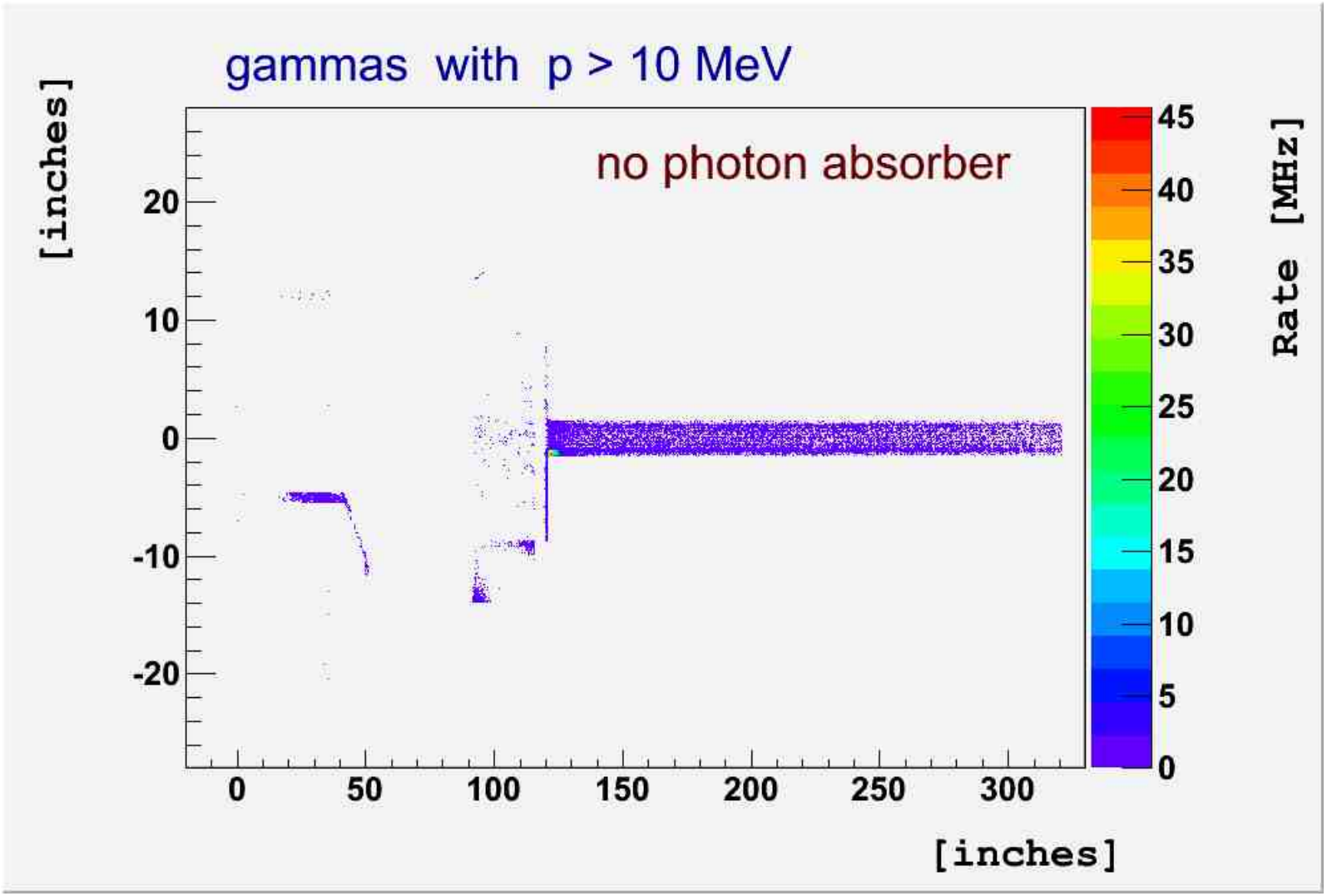

HPS Test Beamline

Time on Target: 3525.08 nanoseconds.

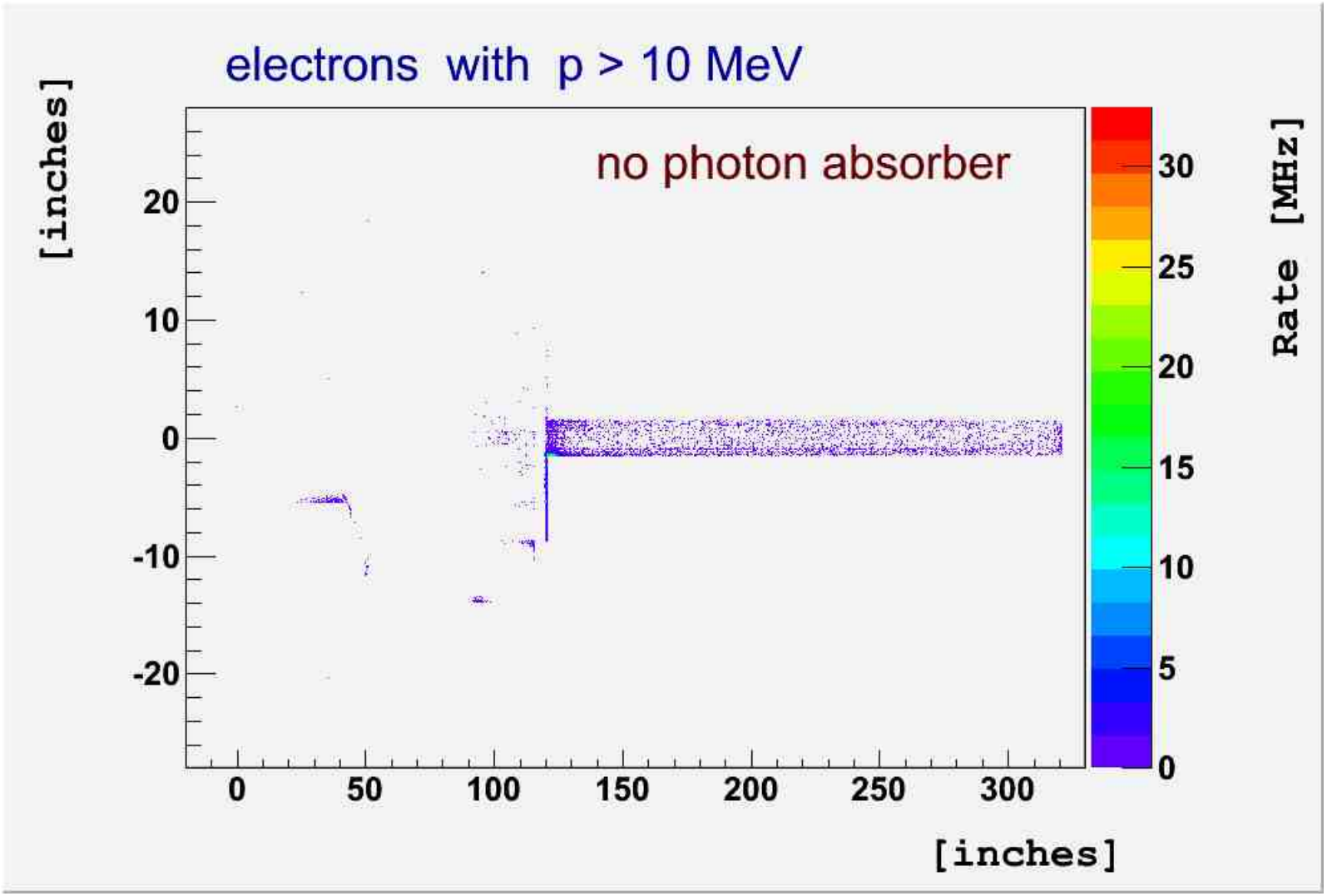

HPS Test Beamline

Time on Target: 3525.08 nanoseconds.

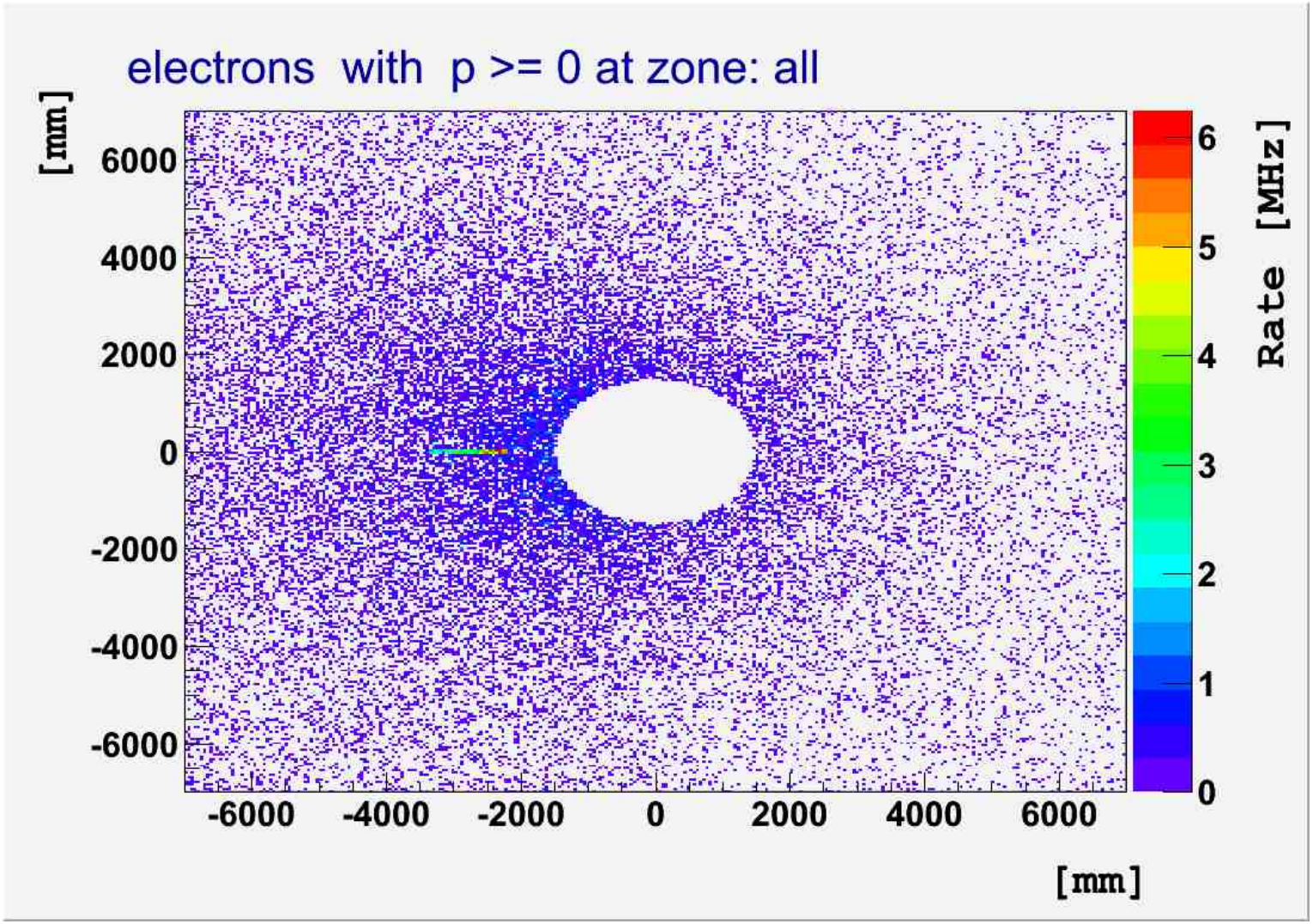

HPS Test Beamline

Time on Target: 3525.08 nanoseconds.

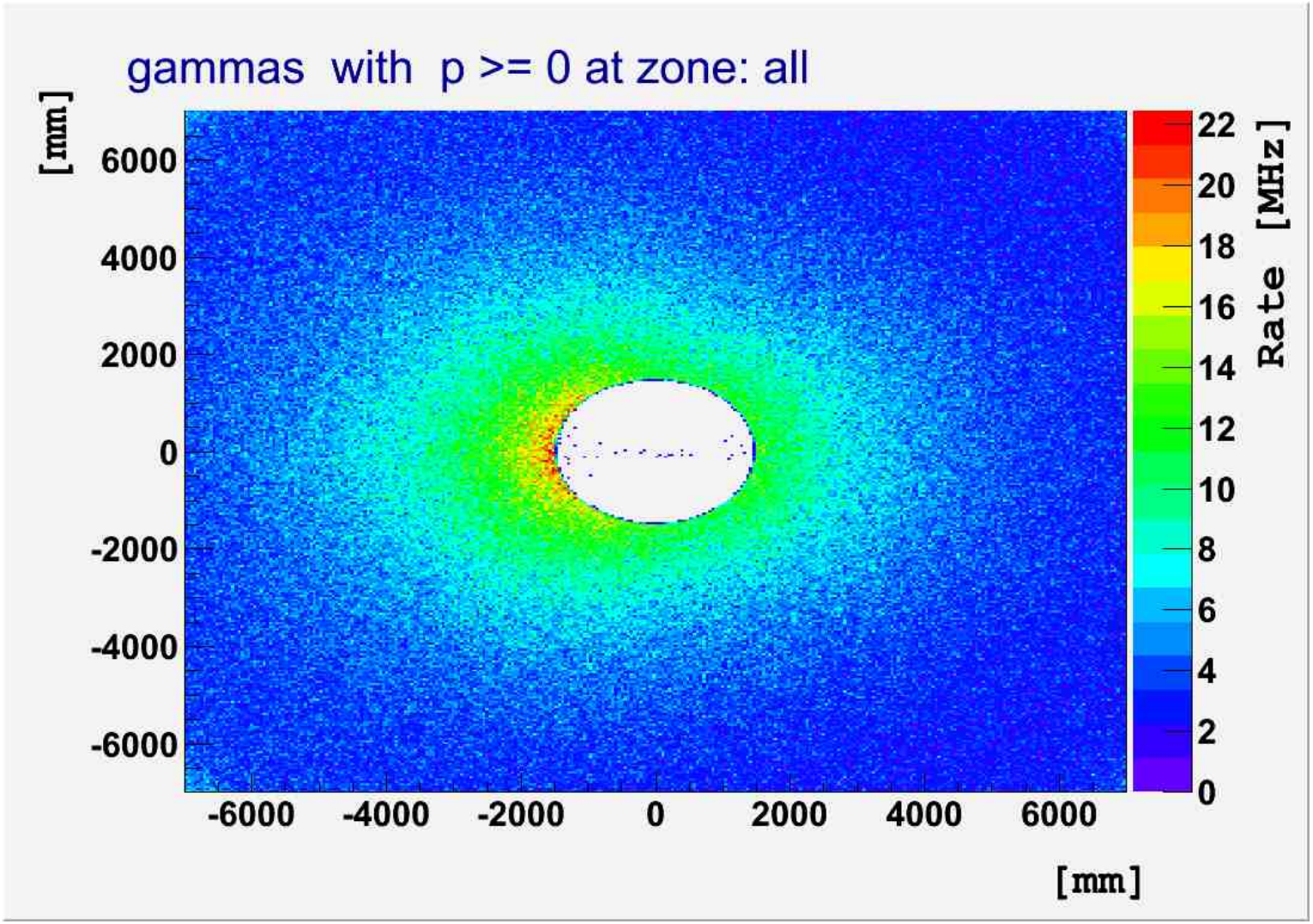

HPS Test Beamline

Time on Target: 3525.08 nanoseconds.

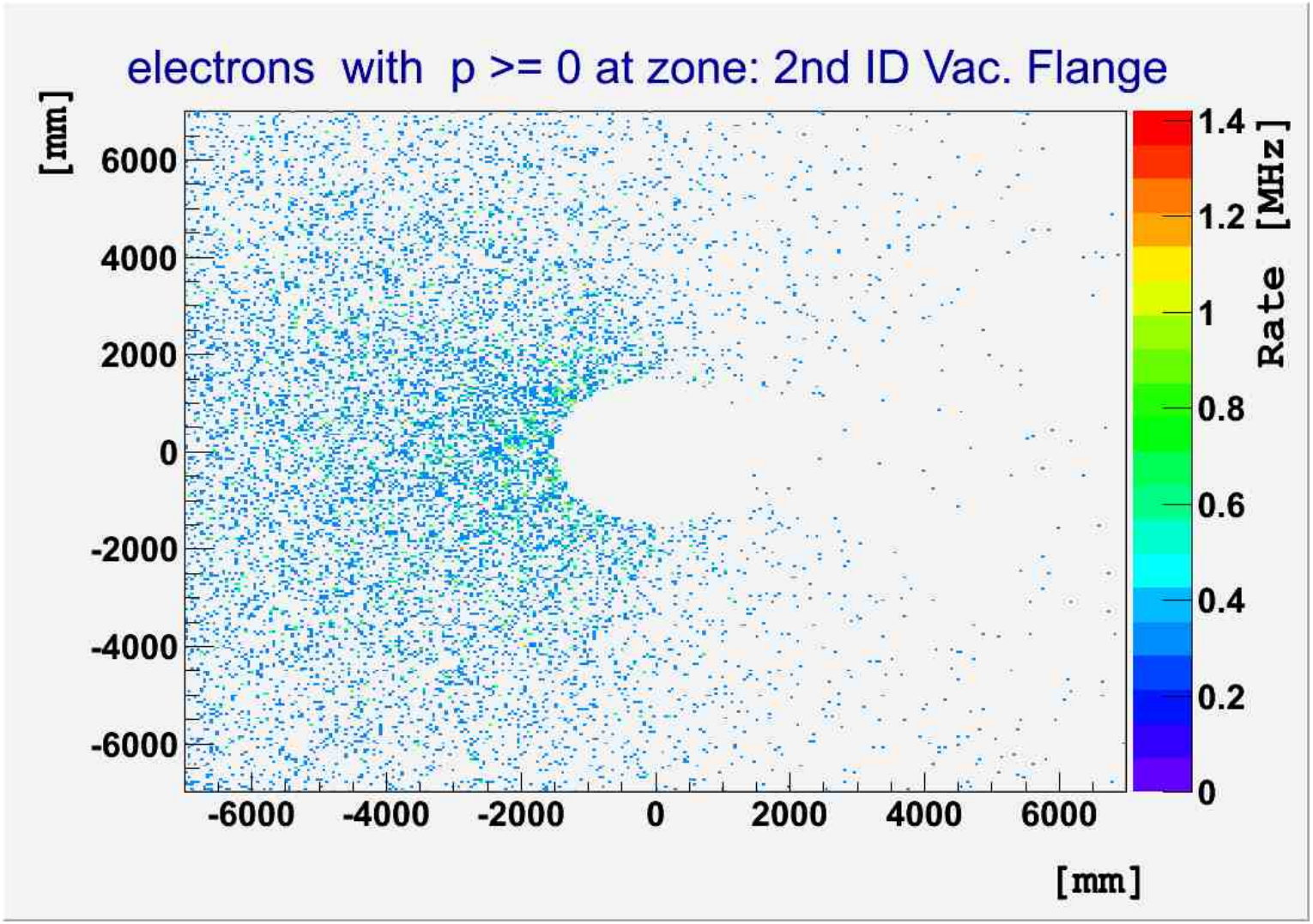

HPS Test Beamline

Time on Target: 3525.08 nanoseconds.

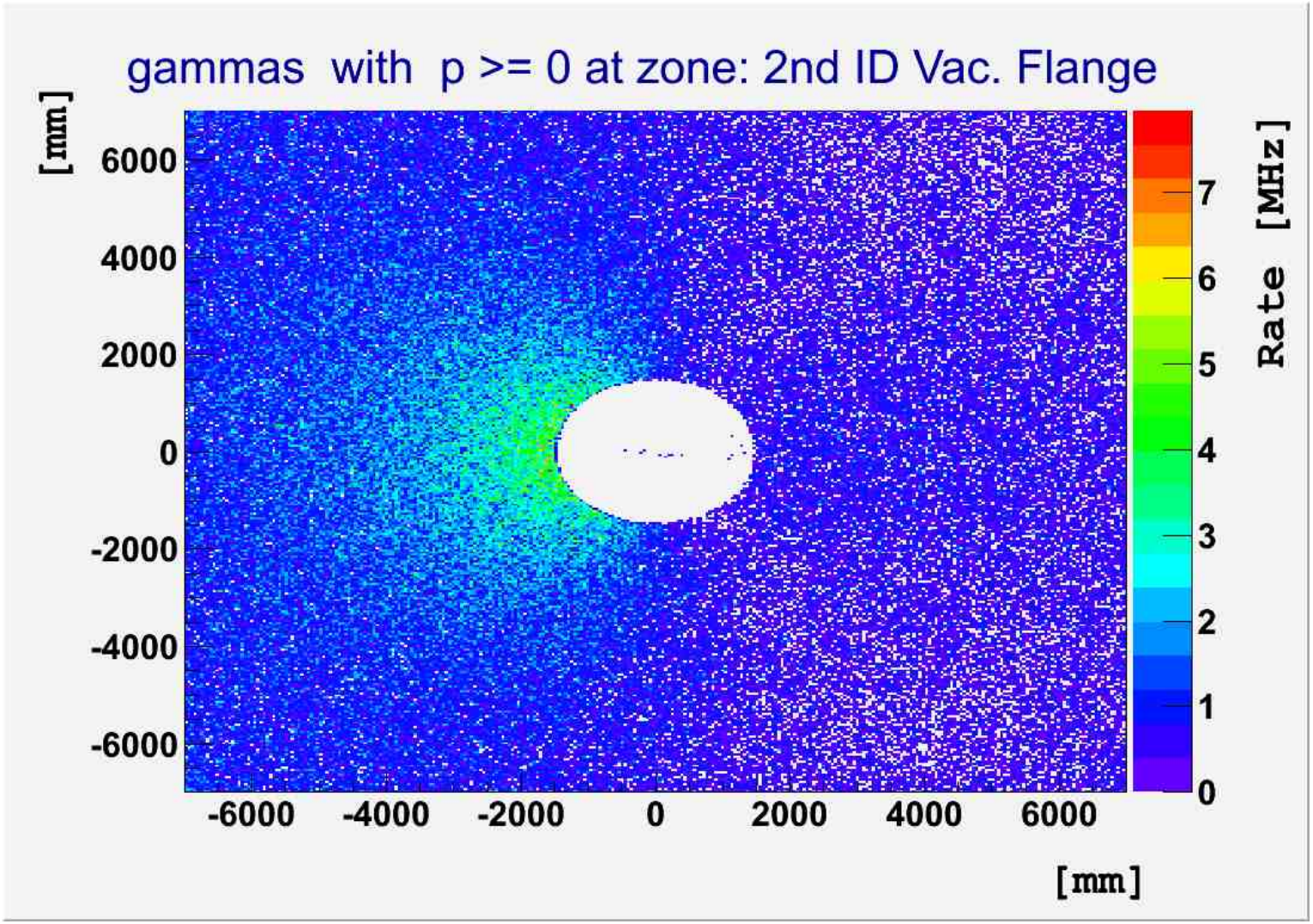

HPS Test Beamline

Time on Target: 3525.08 nanoseconds.

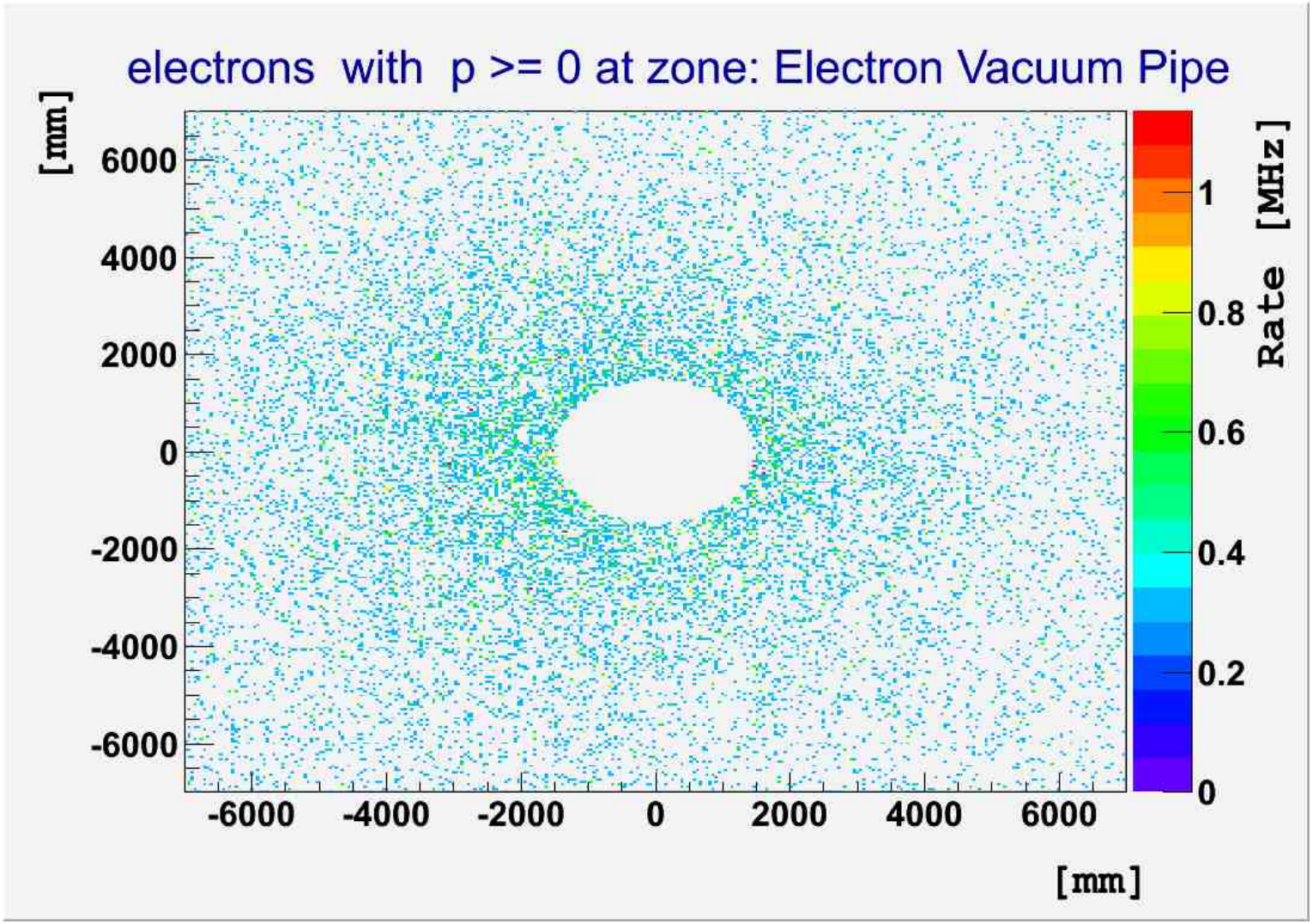

HPS Test Beamline
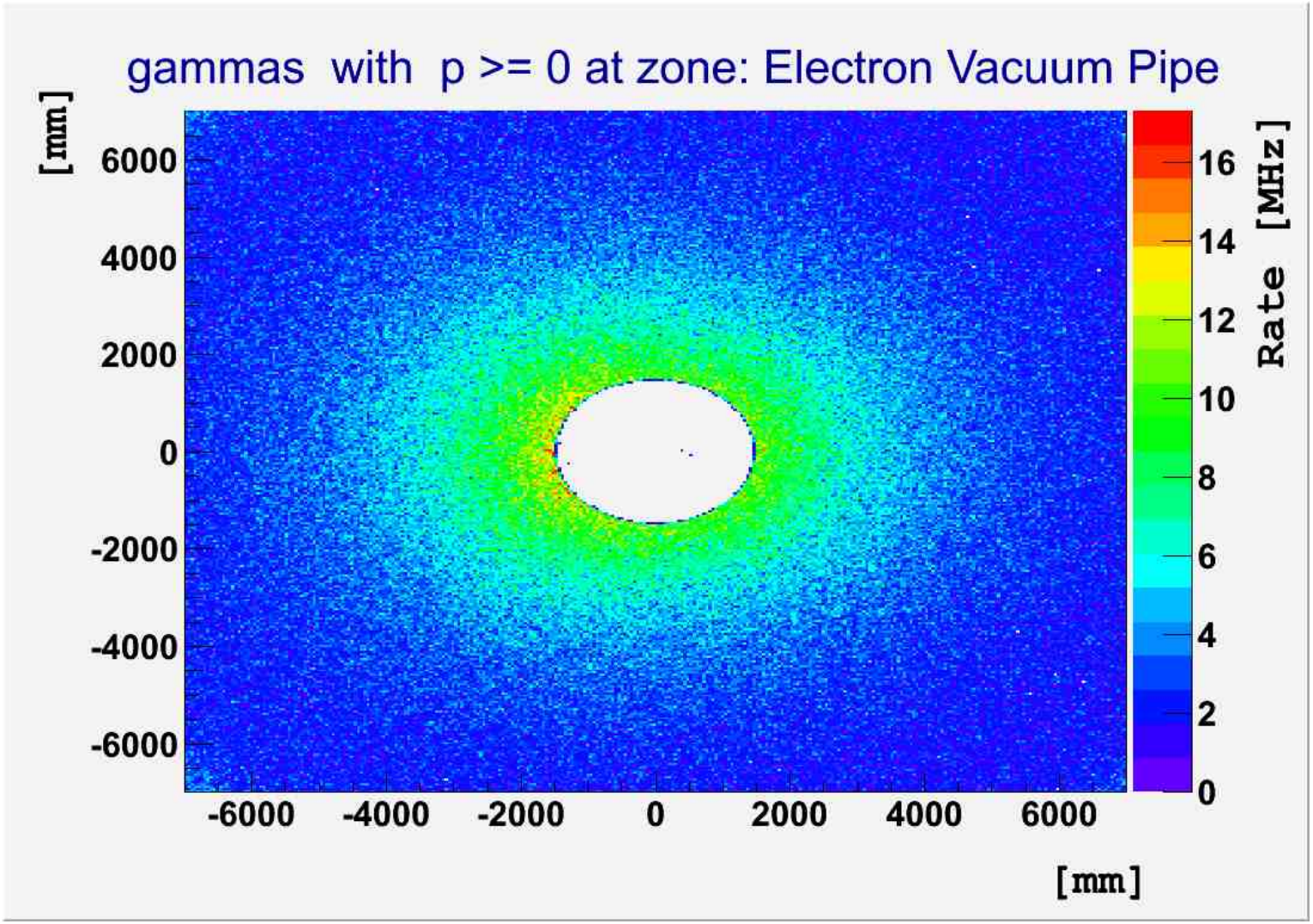
Time on Target: 3525.08 nanoseconds.